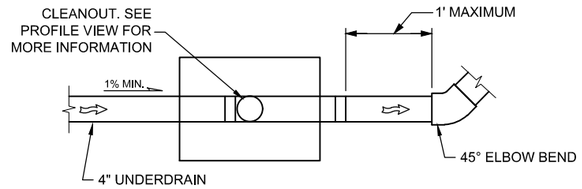

CLEANOUT UPSTREAM OF BEND (PLAN VIEW)

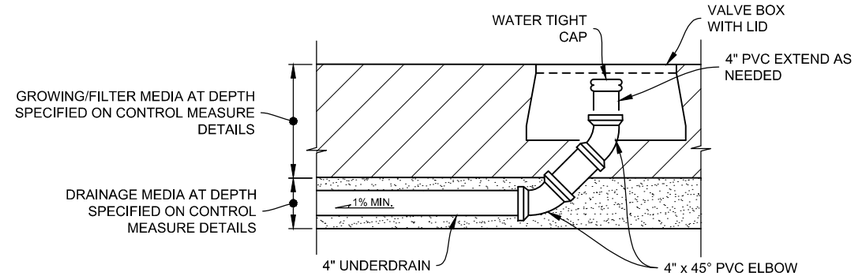

UPSTREAM END OF UNDERDRAIN

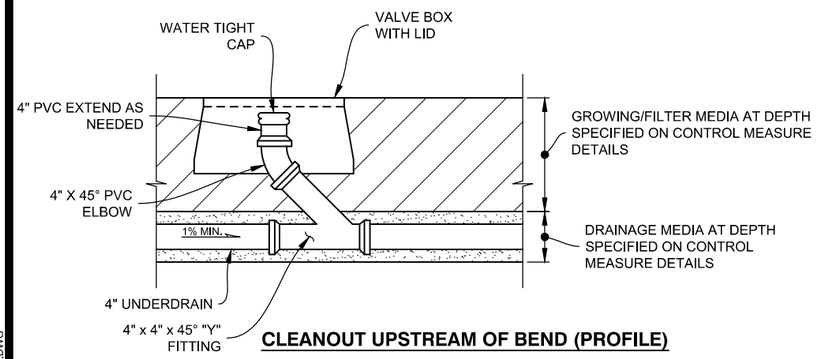

CLEANOUT UPSTREAM OF BEND (PROFILE)

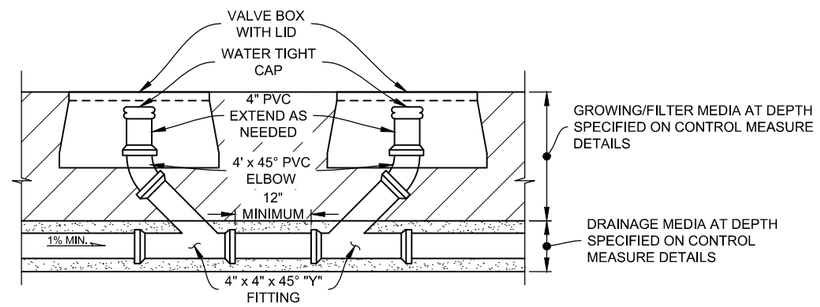

DOUBLE SWEEP CLEANOUT

CLEANOUT NOTES:

1. ALL 90° BENDS IN UNDERDRAIN SHALL BE MADE UP OF TWO 45° BENDS WITH A 1'(MIN) STRAIGHT PIPE IN BETWEEN.
2. FOR ALL FACILITIES, MAXIMUM SPACING BETWEEN CLEANOUTS IS 150'. A DOUBLE SWEEP CLEANOUT SHALL BE USED ALONG STRAIGHT SECTIONS OF PIPE AT 150' SPACING.
3. VALVE BOX SHALL BE RAIN BIRD MODEL #PVBJMB WITH A LOCKABLE LID, OR SEMSWA APPROVED EQUIVALENT.
4. A CLEANOUT IS NOT REQUIRED AT BENDS INTO AN OUTLET STRUCTURE IF THE BEND IS 50' OR LESS FROM THE STRUCTURE.

UNDERDRAIN CLEANOUT DETAILS

N.T.S.

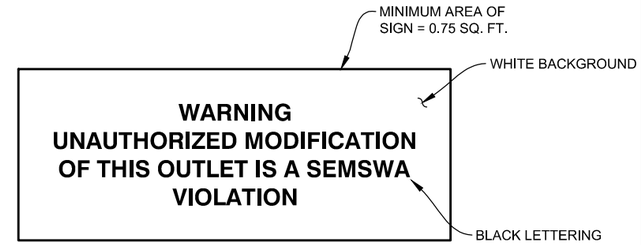

OUTLET MODIFICATION SIGN

N.T.S.

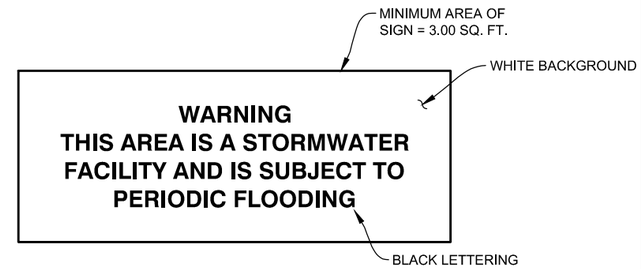

FLOOD HAZARD WARNING SIGN - GENERAL

N.T.S.

SIGNAGE NOTES:

1. OUTLET MODIFICATION SIGN SHALL BE ATTACHED TO OR POSITIONED AT A VISIBLE LOCATION NEAR FACILITY OUTLETS.
2. ONE FLOOD HAZARD WARNING SIGN SHALL BE PROVIDED IDENTIFYING THE FACILITY PONDING AREA. THE SIGN SHALL BE PLACED AT A VISIBLE LOCATION. SEMSWA RESERVES THE RIGHT TO REQUEST ADDITIONAL SIGNS FOR SOME CONTROL MEASURES.
3. ALL SIGNS MUST BE PROFESSIONALLY PRODUCED (NO PEEL - OFF LETTERS) AND INCLUDE SEMSWA'S LOGO.

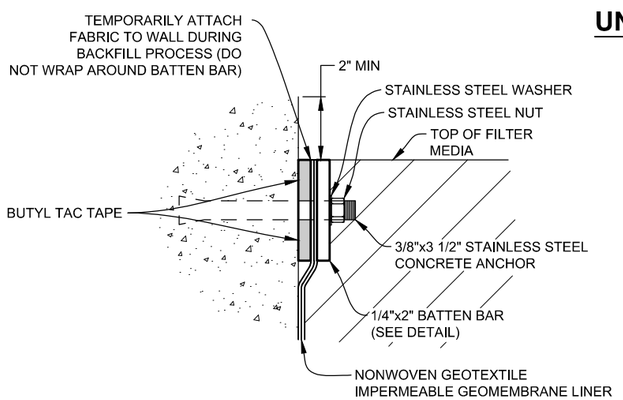

NOTE:

1. SEE USDCM, VOLUME 3, T-3 FOR GEOMEMBRANE LINER/UNDERDRAIN PENETRATION DETAIL.

FABRIC ATTACHMENT DETAIL

N.T.S.

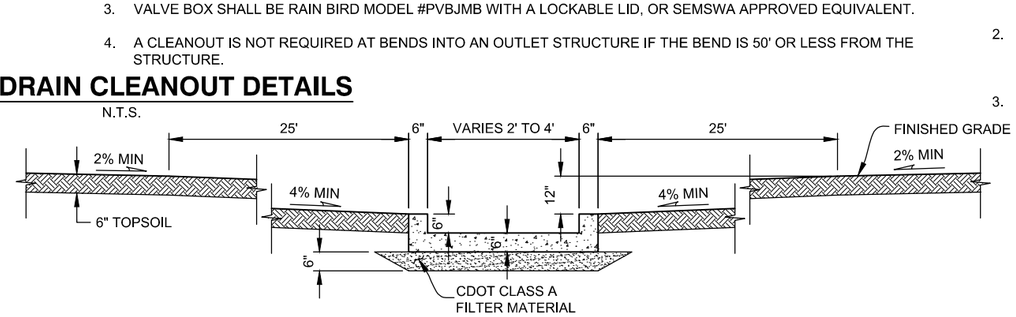

CONCRETE TRICKLE CHANNEL DETAIL

N.T.S.

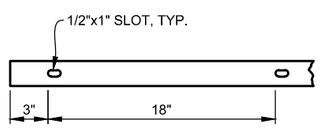

1/4"x2" ALUMINUM, STAINLESS STEEL OR GALVANIZED STEEL BATTEN BAR

N.T.S.

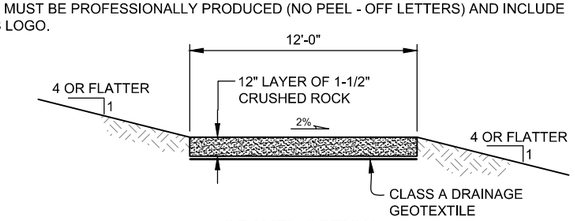

GRAVEL OPTION (BELOW EURV)

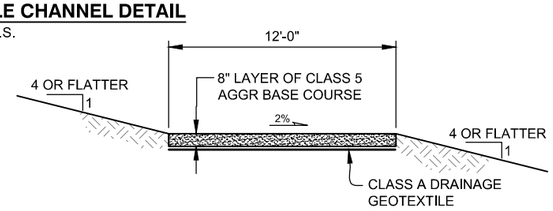

ROAD BASE (ABOVE EURV)

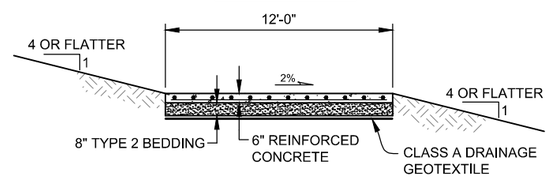

CONCRETE OPTION (BELOW EURV)

MAINTENANCE ROAD DETAILS

N.T.S.

REFERENCE:	SCALE:	Standard Plan Revision		
		No.	Date	Description

ARAPAHOE COUNTY
COLORADO'S FIRST

6924 S. LIMA ST.
CENTENNIAL, CO 80112
PHONE (720) 874-6500
FAX (720) 874-6611

GENERAL DETAILS

SHEET 1 OF 1

PLOTTED: 12/20/2019 7:45:50 AM
NAME: P:\2019 PROJECTS\19-013.01 CM DRWGS AND MATERIAL RECS - DOUGLAS COUNTY\CAD\DRAWINGS\19-013.01_GENERAL DETAILS (ARAPAHOE COUNTY).DWG